8' to 20' ROUND NON-TAPERED ALUMINUM
Hinged Base

Job Name:	Client Name:
Job Location - City: State:	Created By: Date:
Product: Quote:	Customer Approval: Date:

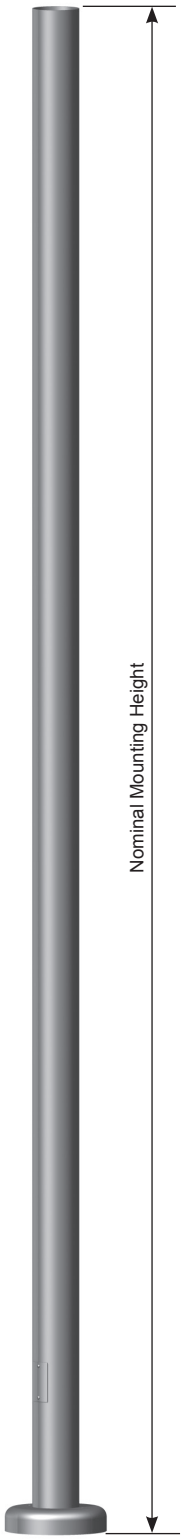

Tenon Top

Cross Section

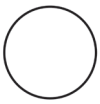

Handhole (Optional)

Hinged Base

Round Hinged Base

SPECIFICATIONS

Pole - The pole shaft is extruded from seamless alloy aluminum.

Pole Top - A pole top tenon is provided for top mount luminaire and/or bracket. A removable pole cap is available for poles receiving drilling patterns for side-mount luminaire arm assemblies.

Handhole - An optional covered handhole with hardware and grounding provision are available upon request.

Base Cover - Optional decorative base covers available as special order.

Anchor Base - The hinged anchor base is cast from 356 alloy aluminum. The completed assembly is heat-treated to a T6 temper. Aluminum 2-piece cover is included with anchor base unless otherwise specified.

Anchor Bolts - Anchor bolts conform to ASTM F1554 Grade 55 and are provided with two hex nuts and two flat washers. Bolts have an “L” bend on one end and are galvanized a minimum of 12” on the threaded end.

Finish - The standard finish for the pole assembly and components is satin brushed, natural anodize, duranodic or polyester powder applied coating in accordance with Valmont’s Specifications. Additional finish options available upon request.

Design Criteria - Please reference Design Criteria Specification for appropriate design conditions.

8' to 20' ROUND NON-TAPERED ALUMINUM
Hinged Base

valmont STRUCTURES

Job Name:		Client Name:	
Job Location - City:	State:	Created By:	Date:
Product:	Quote:	Customer Approval:	Date:

ANCHORAGE DATA

POLE		BASE PLATE				ANCHOR BOLTS		
BASE OD (IN)	WALL THK (IN)	BOLT CIRCLE DIA (IN)	BOLT CIRCLE ± (IN)	DIA (IN)	THK (IN)	DIA x LENGTH x HOOK (IN)	PROJECTION (IN)	± (IN)
4.00	0.125	9.25	0.75	12.63	0.750	0.75 x 17.00 x 3.00	3.50	N/A
5.00	0.125	9.25	0.75	12.63	0.750	0.75 x 17.00 x 3.00	3.50	N/A
5.00	0.156	9.25	0.75	12.63	0.750	0.75 x 17.00 x 3.00	3.50	N/A
5.00	0.188	9.25	0.75	12.63	0.750	0.75 x 17.00 x 3.00	3.50	N/A
6.00	0.156	9.25	0.75	12.63	0.750	0.75 x 17.00 x 3.00	3.50	N/A
6.00	0.188	9.25	0.75	12.63	0.750	0.75 x 17.00 x 3.00	3.50	N/A

Anchor Base Detail

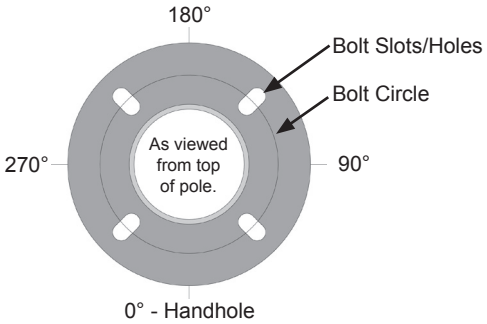

LOAD AND DIMENSIONAL DATA

DESIGN INFORMATION											POLE DIMENSIONS					
	70 MPH w/1.3 GUST		80 MPH w/1.3 GUST		90 MPH w/1.3 GUST		100 MPH w/1.3 GUST		110 MPH w/1.3 GUST							
NOMINAL MOUNTING HEIGHT	MAX EPA1 (SQ FT)	MAX WEIGHT (LBS)	MAX EPA1 (SQ FT)	MAX WEIGHT (LBS)	MAX EPA1 (SQ FT)	MAX WEIGHT (LBS)	MAX EPA1 (SQ FT)	MAX WEIGHT (LBS)	MAX EPA1 (SQ FT)	MAX WEIGHT (LBS)	POLE HEIGHT	BASE OD (IN)	TOP OD (IN)	WALL THK (IN)	STRUTURE WEIGHT2 (LBS)	MODEL NUMBER
8'-0"	10.8	50	8.0	50	6.1	50	4.8	50	3.9	50	8'-0"	4.00	4.00	0.125	19	080040404SH
10'-0"	8.2	50	5.9	50	4.4	50	3.3	50	2.7	50	10'-0"	4.00	4.00	0.125	22	100040404SH
	15.5	50	11.6	50	9.0	50	7.2	50	5.9	50	10'-0"	5.00	5.00	0.125	27	100050504SH
12'-0"	6.3	50	4.4	50	3.1	50	2.2	50	1.8	50	12'-0"	4.00	4.00	0.125	26	120040404SH
	12.4	50	9.1	50	7.0	50	5.6	50	4.5	50	12'-0"	5.00	5.00	0.125	32	120050504SH
	15.7	50	11.6	50	9.0	50	7.2	50	5.8	50	12'-0"	5.00	5.00	0.156	38	120050505SH
	18.9	50	14.1	50	11.0	50	8.8	50	7.1	50	12'-0"	5.00	5.00	0.188	45	120050506SH
14'-0"	4.7	50	3.1	50	2.0	50	1.3	50	1.0	50	14'-0"	4.00	4.00	0.125	30	140040404SH
	9.8	50	7.0	50	5.4	50	4.2	50	3.4	50	14'-0"	5.00	5.00	0.125	36	140050504SH
	12.6	50	9.2	50	7.1	50	5.6	50	4.5	50	14'-0"	5.00	5.00	0.156	44	140050505SH
	15.4	50	11.3	50	8.7	50	6.9	50	5.6	50	14'-0"	5.00	5.00	0.188	52	140050506SH
16'-0"	3.4	50	2.0	50	1.1	50	0.5	50	0.3	50	16'-0"	4.00	4.00	0.125	33	160040404SH
	7.6	50	5.2	50	3.9	50	3.0	50	2.4	50	16'-0"	5.00	5.00	0.125	41	160050504SH
	10.0	50	7.1	50	5.4	50	4.2	50	3.3	50	16'-0"	5.00	5.00	0.156	50	160050505SH
	12.3	50	8.9	50	6.8	50	5.3	50	4.3	50	16'-0"	5.00	5.00	0.188	58	160050506SH
	18.1	50	13.6	50	10.6	50	8.4	50	6.8	50	16'-0"	6.00	6.00	0.156	59	160060605SH
	22.0	50	16.6	50	12.9	50	10.3	50	8.4	50	16'-0"	6.00	6.00	0.188	70	160060606SH
18'-0"	5.7	75	3.7	75	2.7	75	2.0	75	1.5	75	18'-0"	5.00	5.00	0.125	45	180050504SH
	7.7	75	5.3	75	4.0	75	3.0	75	2.4	75	18'-0"	5.00	5.00	0.156	55	180050505SH
	9.8	75	6.8	75	5.2	75	4.0	75	3.2	75	18'-0"	5.00	5.00	0.188	65	180050506SH
	18.1	75	13.6	75	10.5	75	8.4	75	6.8	75	18'-0"	6.00	6.00	0.188	78	180060606SH
20'-0"	4.2	75	2.5	75	1.7	75	1.2	75	0.8	75	20'-0"	5.00	5.00	0.125	50	200050504SH
	6.0	75	3.9	75	2.8	75	2.1	75	1.6	75	20'-0"	5.00	5.00	0.156	61	200050505SH
	7.7	75	5.2	75	3.9	75	2.9	75	2.3	75	20'-0"	5.00	5.00	0.188	72	200050506SH
	12.0	75	8.9	75	6.8	75	5.3	75	4.2	75	20'-0"	6.00	6.00	0.156	73	200060605SH
	15.0	75	11.1	75	8.6	75	6.8	75	5.4	75	20'-0"	6.00	6.00	0.188	86	200060606SH

1. EPA represents the Effective Projected Area of each luminaire. Designs are limited to top mount or side-mount luminaires. Variations from sizes above are available upon inquiry at the factory. Satisfactory performance of poles is dependent upon the pole being properly attached to a supporting foundation of adequate design.
2. Structure weight is a nominal value which includes the pole shaft and base plate.

CAUTION: Raising or lowering of the pole requires adequate preparation. Do not underestimate the force required to raise or lower poles with heavy luminaires at the top.

PRODUCT ORDERING CODES

CROSS SECTION	MODEL NUMBER	FIXTURE MOUNTING	COLOR		OPTIONS
R		--		_	
R = Round	080040404SH 100040404SH 100050504SH 120040404SH 120050504SH 120050505SH 120050506SH 140040404SH 140050504SH 140050505SH 140050506SH 160040404SH 160050504SH 160050505SH 160050506SH 160060605SH 160060606SH 180050504SH 180050505SH 180050506SH 180060606SH 200050504SH 200050505SH 200050506SH 200060605SH 200060606SH	**Drill Mounting** D1 = 1 Luminaire D2 = 2 @ 180° D3 = 3 @ 120° D4 = 4 @ 90° D5 = 2 @ 90° D6 = 3 @ 90° **Tenon Mounting** P2 = 2.38" OD x 4.00" P3 = 3.50" OD x 6.00" P4 = 4.00" OD x 6.00" P5 = 2.88" OD x 4.00" P7 = 2.38" OD x 5.00" PQ = 2.38" OD x 12.00" PD = 3.00" OD x 3.00" -- = Plain Top P9 = Other Tenon (Contact Factory)	**Polyester Powder** DWH = White DSS = Sandstone BR = Burgundy HG = Hunter Green DNA = Natural Aluminum DCG = Charcoal Gray DMB = Medium Bronze SBN = Sanded Brown DNB = New Dark Bronze DDB = Dark Bronze SBK = Sanded Black DBL = Black DSB = Steel Blue DTG = Dark Green DBR = Red SC = Special Color (Contact Factory)	**Anodized** 204 = Clear Natural 311 = Light Bronze* 312 = Medium Bronze* 313 = Dark Bronze* 335 = Black* *Duranodic Anodize **Brushed** SBF = Satin Brushed	See Accessories at valmontstructures.com (Please Specify with Code)

SPC7084 08/12 valmontstructures.com carries the most current spec information and supersedes these guidelines.