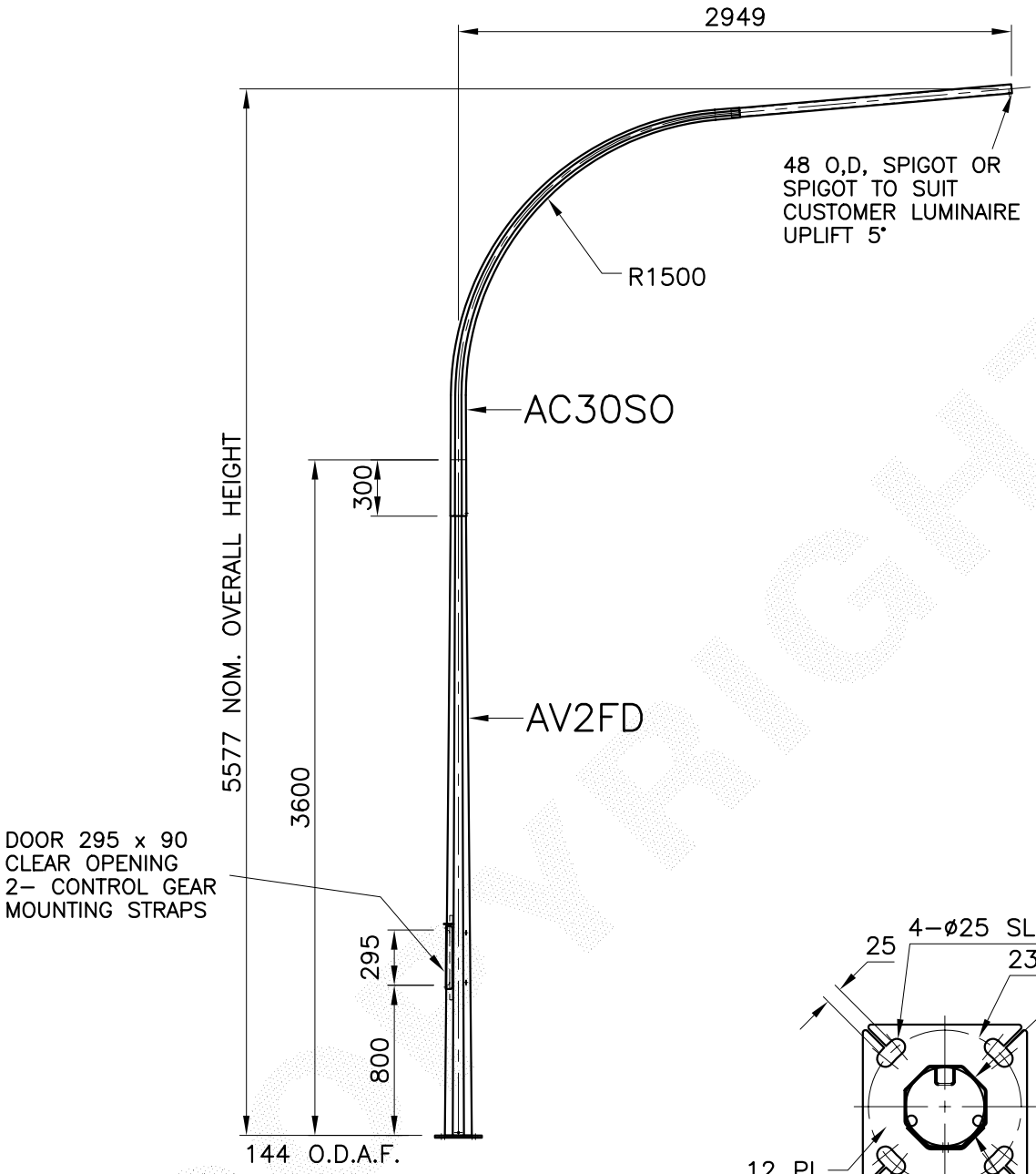

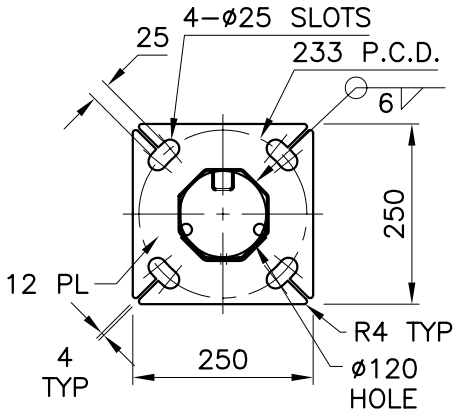

BASEPLATE DETAIL

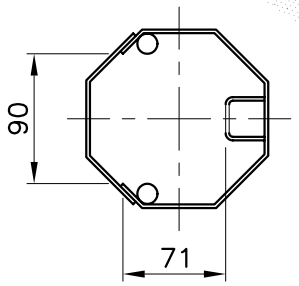

CONTROL GEAR CLEARANCES

NOTES:

1. ALL STEEL COIL TO CONFORM TO AS/NZS 1594 GRADE HU300 U.O.N.
   ALL STEEL PLATES TO CONFORM TO AS/NZS 3678 GRADE 250 U.O.N.
2. ALL STEEL BARS AND SECTIONS TO CONFORM TO AS/NZS 3679 GRADE 250 U.O.N.
3. ALL WELDS TO CONFORM TO AS/NZS 1554 PART 1
4. ALL TAPER LOCK JOINT LENGTHS ARE NOMINAL U.O.N.
5. ALL STEEL TO BE FULLY HOT DIP GALVANIZED AFTER FABRICATION
   IN ACCORDANCE WITH AS/NZS 4680

REV	DATE	DESCRIPTION	BY	CHKD
0	20/1/99	FIRST ISSUE	I.W.	PPA

CUSTOMER/PROJECT

COPYRIGHT
THIS DOCUMENT PRODUCED BY INGAL EPS MUST NOT BE COPIED, TRACED, REPRODUCED, OR LENT WITHOUT WRITTEN CONSENT

DIMENSIONS IN MILLIMETRES

A4 DO NOT SCALE

CHECKED BY PPA | DATE 11/2/00

INGAL EPS

STREET LIGHTING
5.5m, 3m SINGLE OUTREACH AVENUE
BASEPLATE MOUNTED
RIVERTON DESIGN

DATE 20/1/98 | DRAWN BY I. WHITE | SCALE 1:35

CATALOGUE NUMBER
SAL55FS030
DRAWING NUMBER
SAL55FS030

CAD FILE No.
Z:\ACAD\STD\AVENUE\SAL55F-S30