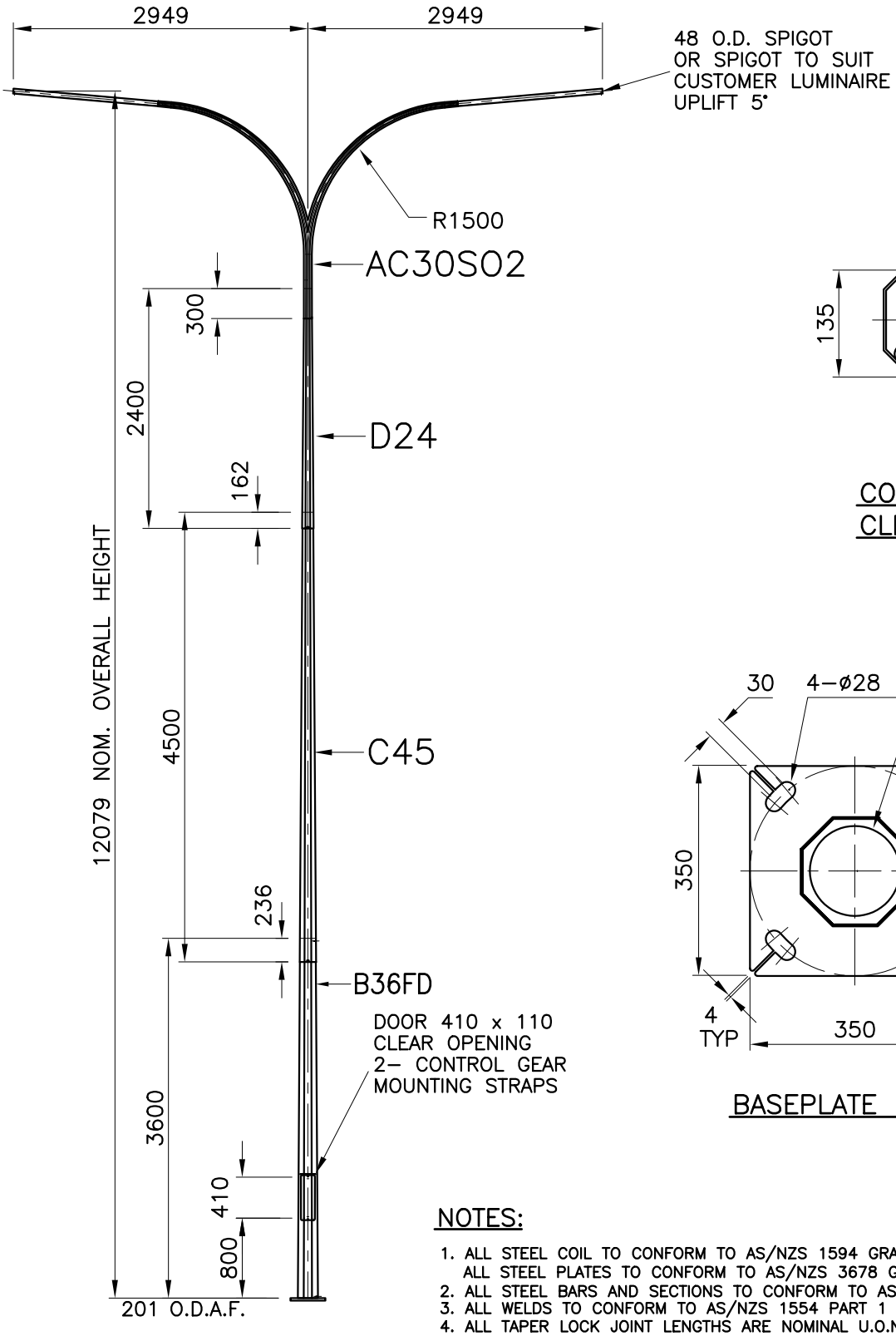

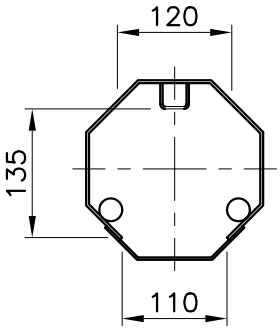

CONTROL GEAR
CLEARANCES

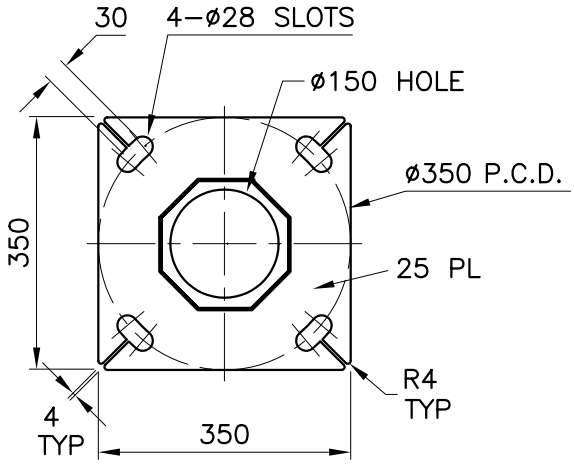

BASEPLATE DETAIL

NOTES:

1. ALL STEEL COIL TO CONFORM TO AS/NZS 1594 GRADE HU300 U.O.N.
   ALL STEEL PLATES TO CONFORM TO AS/NZS 3678 GRADE 250 U.O.N.
2. ALL STEEL BARS AND SECTIONS TO CONFORM TO AS/NZS 3679 GRADE 250 U.O.N.
3. ALL WELDS TO CONFORM TO AS/NZS 1554 PART 1
4. ALL TAPER LOCK JOINT LENGTHS ARE NOMINAL U.O.N.
5. ALL STEEL TO BE FULLY HOT DIP GALVANIZED AFTER FABRICATION
   IN ACCORDANCE WITH AS/NZS 4680

REV	DATE	DESCRIPTION	BY	CHKD
0	7/12/98	REDRAWN FROM SL204 & UPDATED	I.W.	

CUSTOMER/PROJECT

COPYRIGHT
THIS DOCUMENT PRODUCED BY INGAL EPS MUST NOT BE COPIED, TRACED, REPRODUCED, OR LENT WITHOUT WRITTEN CONSENT

DIMENSIONS IN MILLIMETRES

A4 DO NOT SCALE

CHECKED BY | DATE 10/12/98

INGAL EPS

STREET LIGHTING
12m, 3m DOUBLE OUTREACH AVENUE
BASEPLATE MOUNTED
RIVERTON DESIGN

DATE 7/12/98 | DRAWN BY I. WHITE | SCALE 1:60

CATALOGUE NUMBER
SAL12FD030
DRAWING NUMBER
SAL12FD030

CAD FILE No.
Z:\ACAD\STD\AVENUE\SAL12F-D30