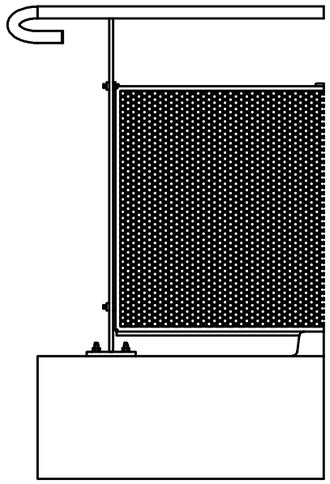

ALTERNATIVE WEBFORGE AS5100 TOP MOUNT CONFIGURATION

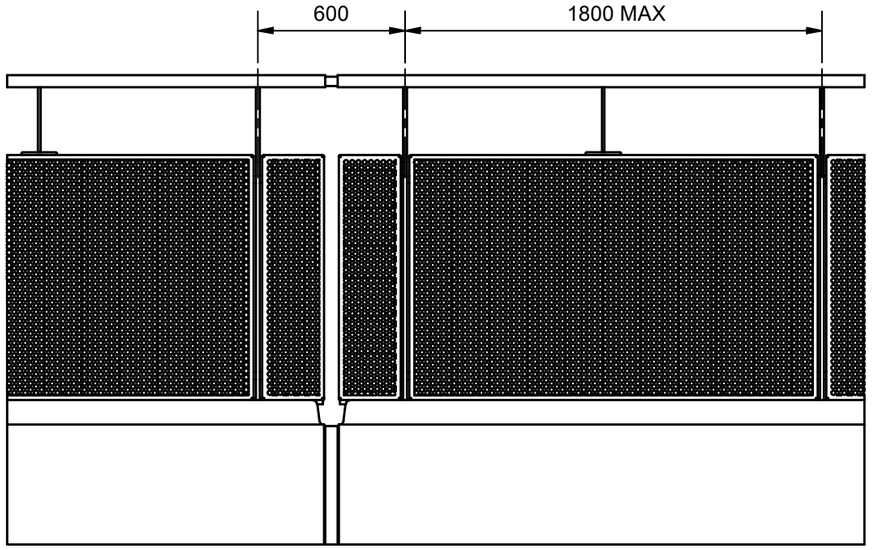

TYPICAL WEBFORGE AS5100 SIDE MOUNT CONFIGURATION

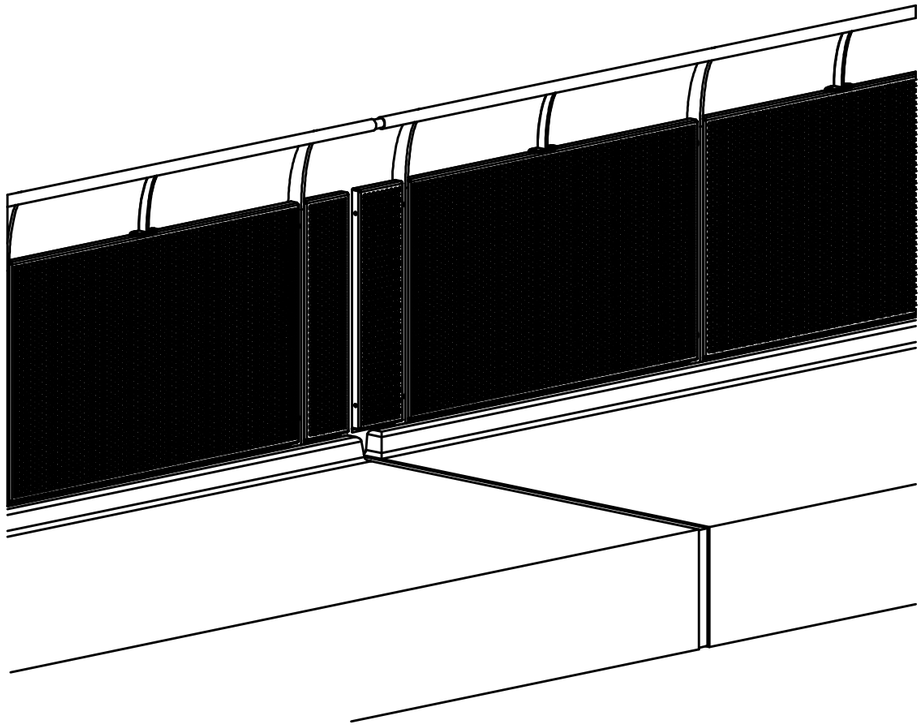

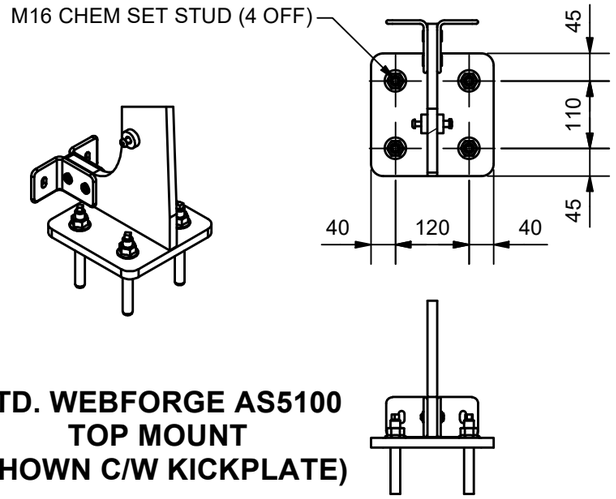

STD. WEBFORGE AS5100 TOP MOUNT (SHOWN C/W KICKPLATE)

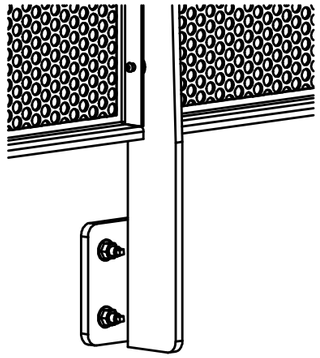

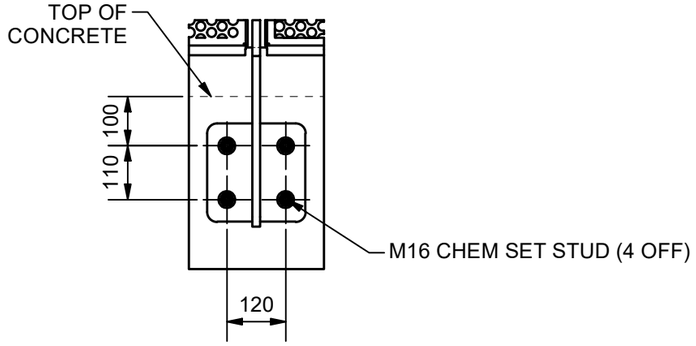

STD. WEBFORGE AS5100 SIDE MOUNT

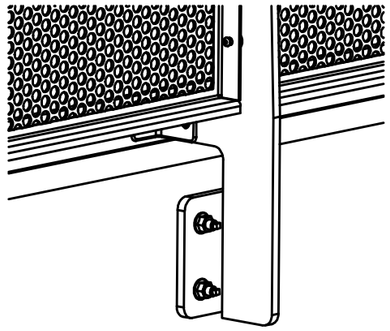

STD. WEBFORGE AS5100 SIDE MOUNT (SHOWN C/W KICKPLATE)

NOTES:

1. MONOWILLS LINK AS5100 BARRIER IS DESIGNED TO MEET THE STATIC LOAD & DEFLECTION REQUIREMENTS OF PEDESTRIAN BARRIERS AS/NZS 5100.2-2017 CLAUSE 11.5, WHEN MANUFACTURED IN ACCORDANCE TO WEBFORGE MANUFACTURING PROCEDURE.
2. WHERE THE AUTHORITY REQUIRES PEDESTRIAN BARRIERS TO RESTRAIN CROWDS OR PEOPLE UNDER PANIC CONDITIONS, THE MONOWILLS LINK AS5100 BARRIER CAN BE ADJUSTED TO MEET HIGHER LOADS UNDER WEBFORGE INSTRUCTION.
3. MONOWILLS LINK AS5100 BARRIER IS DESIGNED TO MEET THE DIMENSIONAL AND FUNCTIONAL REQUIREMENTS OF THE FOLLOWING STANDARDS WHEN SPECIFIED:
   a. VELOCITY RAIL - AS PER SHARED PATH RECOMMENDATIONS PUBLISHED IN AUSTROADS - GUIDE TO ROAD DESIGN PART 6A
   b. BALUSTRADE - AS PER DIMENSIONAL REQUIREMENTS FOR ANTI-CLIMB AND FALL FROM HEIGHT PROTECTION IN NCC VOLUME 2
   c. HANDRAIL - AS PER DIMENSIONAL REQUIREMENTS INCLUDING FUNCTIONAL CLEAR HAND ACCESS AS OUTLINED IN AS/NZS 1428.1-2009
4. MONOWILLS LINK AS5100 BARRIER IS SUPPLIED IN HDG MILD STEEL. VELOCITY PIPE, HANDRAIL PIPE & KICKPLATE CAN BE UPGRADED TO STAINLESS STEEL ON REQUEST.
5. CUSTOMER TO NOMINATE PREFERRED FOOTING / FIXING (PLATFORM MOUNT / SIDE MOUNT)
6. PROTECTION TREATMENT AND PAINT SYSTEMS TO BE IN ACCORDANCE WITH CLIENT REQUIREMENTS

DRAWING DISCLAIMER:
WEBFORGE PROVIDES THE INFORMATION CONTAINED IN THIS DRAWING AS A GUIDE FOR YOUR INFORMATION ONLY. WEBFORGE HAS TAKEN REASONABLE CARE TO ENSURE THE ACCURACY OF THE INFORMATION AT THE TIME OF PRODUCTION. WEBFORGE EXPRESSLY DISCLAIMS ALL LIABILITY WHATSOEVER FOR (INCLUDING ANY DIRECT OR INDIRECT LOSS OR DAMAGE, COSTS OR EXPENSES HOWSOEVER INCURRED BY ANY PERSON) RELIANCE ON THE WHOLE OR ANY PART OF THE INFORMATION CONTAINED IN OR OMITTED FROM THIS DRAWING. WEBFORGE RESERVES THE RIGHT TO MAKE TECHNICAL CHANGES WITHOUT NOTICE.

REV	DESCRIPTION	DATE	DRAWN
0	ISSUED FOR PUBLICATION	26NOV20	AJM

DRAWN	MDG	
DRAWN DATE	14OCT20	
APPROVED	MT	
APPROVED DATE	14OCT20	

PROJECTION
DO NOT SCALE
ALL DIMENSIONS IN mm U.N.O.

WEBFORGE LOCKER
A valmont COMPANY

CLIENT
WEBFORGE

PRODUCT
MONOWILLS LINK AS5100 BARRIER VELOCITY (PERF INFILL)
ASSEMBLY

DRAWING NUMBER	SHEET	REV
BRVL-EX-003	1 OF 2	0

C:\Vault\Projects\Webforge\PROJECT DATA\W00000 - Standard Drawings\Drawings\BRVL-EX-003.dwg

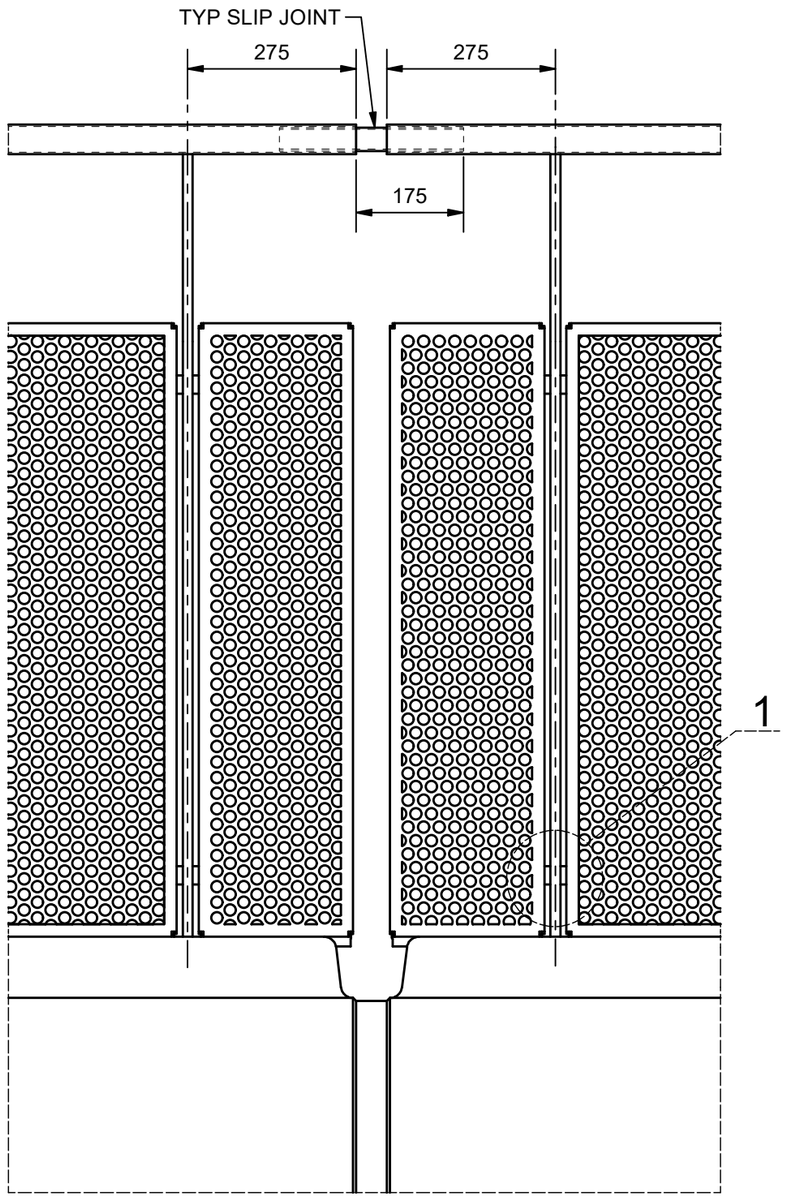

TYPICAL EXPANSION JOINT

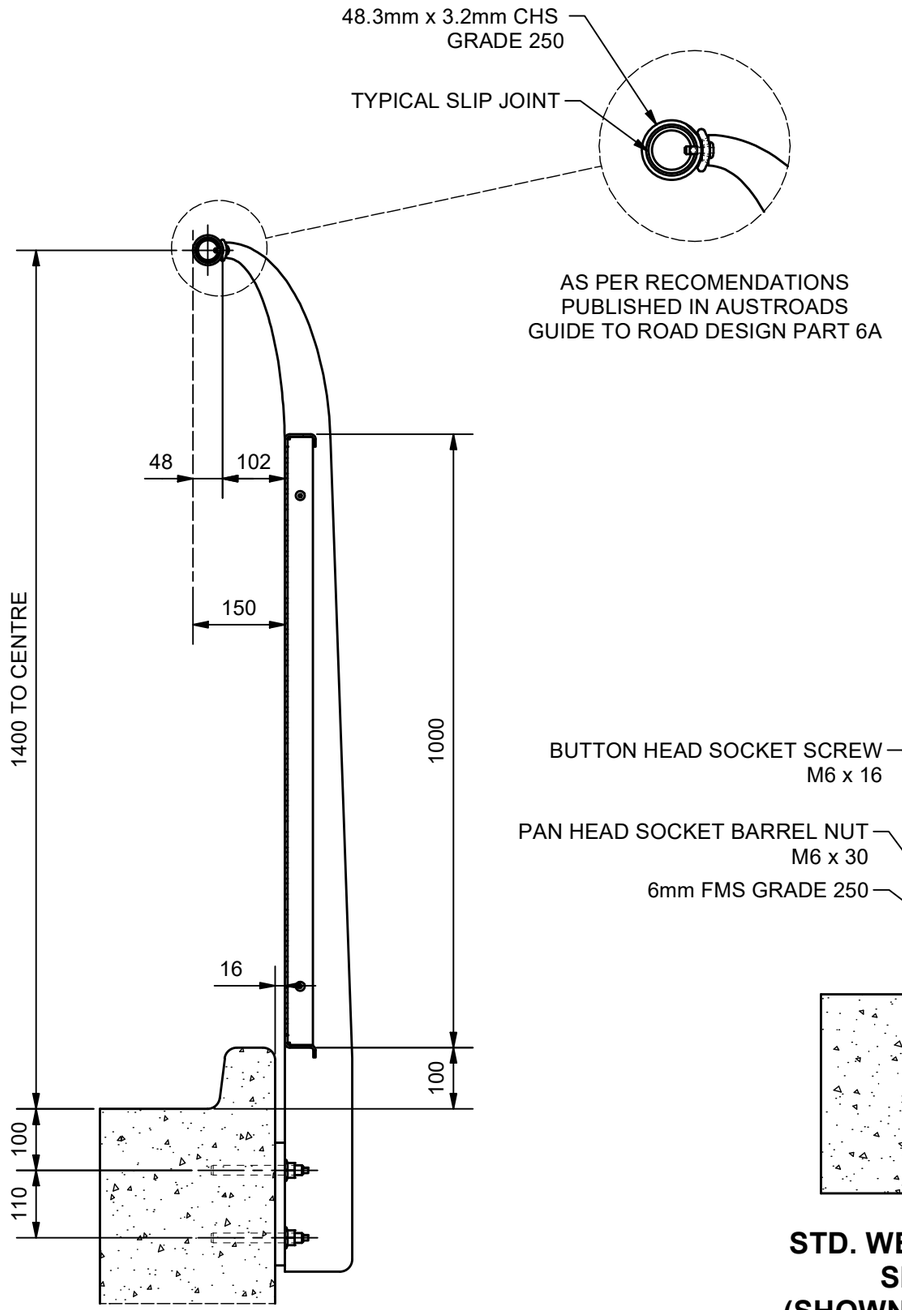

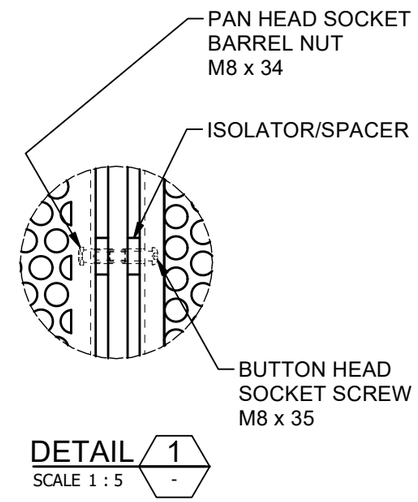

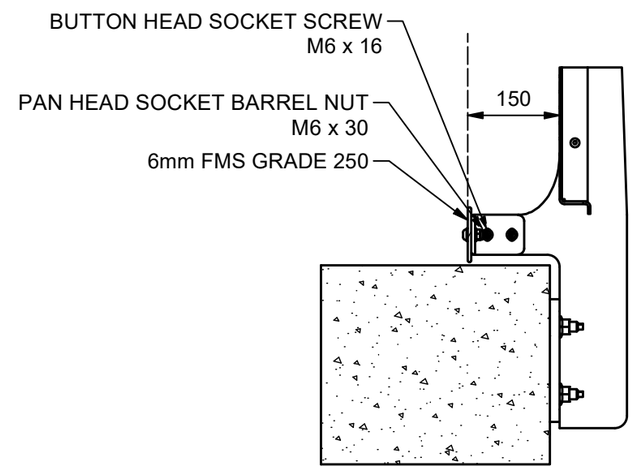

STD. WEBFORGE AS5100
SIDE MOUNT
(SHOWN C/W KICKPLATE)

REV	DESCRIPTION	DATE	DRAWN
0	ISSUED FOR PUBLICATION	26NOV20	AJM

PROJECTION	DRAWN	MDG
DO NOT SCALE	DRAWN DATE	14OCT20
ALL DIMENSIONS IN mm U.N.O.	APPROVED	MT
	APPROVED DATE	14OCT20

WEBFORGE LOCKER
A valmont COMPANY

CLIENT
WEBFORGE

PRODUCT
MONOWILLS LINK AS5100 BARRIER VELOCITY (PERF INFILL)
ASSEMBLY

DRAWING NUMBER	SHEET	REV
BRVL-EX-003	2 OF 2	0

DRAWING DISCLAIMER:
WEBFORGE PROVIDES THE INFORMATION CONTAINED IN THIS DRAWING AS A GUIDE FOR YOUR INFORMATION ONLY. WEBFORGE HAS TAKEN REASONABLE CARE TO ENSURE THE ACCURACY OF THE INFORMATION AT THE TIME OF PRODUCTION. WEBFORGE EXPRESSLY DISCLAIMS ALL LIABILITY WHATSOEVER FOR (INCLUDING ANY DIRECT OR INDIRECT LOSS OR DAMAGE, COSTS OR EXPENSES HOWSOEVER INCURRED BY ANY PERSON) RELIANCE ON THE WHOLE OR ANY PART OF THE INFORMATION CONTAINED IN OR OMITTED FROM THIS DRAWING. WEBFORGE RESERVES THE RIGHT TO MAKE TECHNICAL CHANGES WITHOUT NOTICE.

C:\Vault\Projects\Webforge\PROJECT DATA\W00000 - Standard Drawings\Drawings\BRVL-EX-003.dwg